Circular 1192

Low-Pressure Sprayers

By L.E. Bode and B.J. Butler

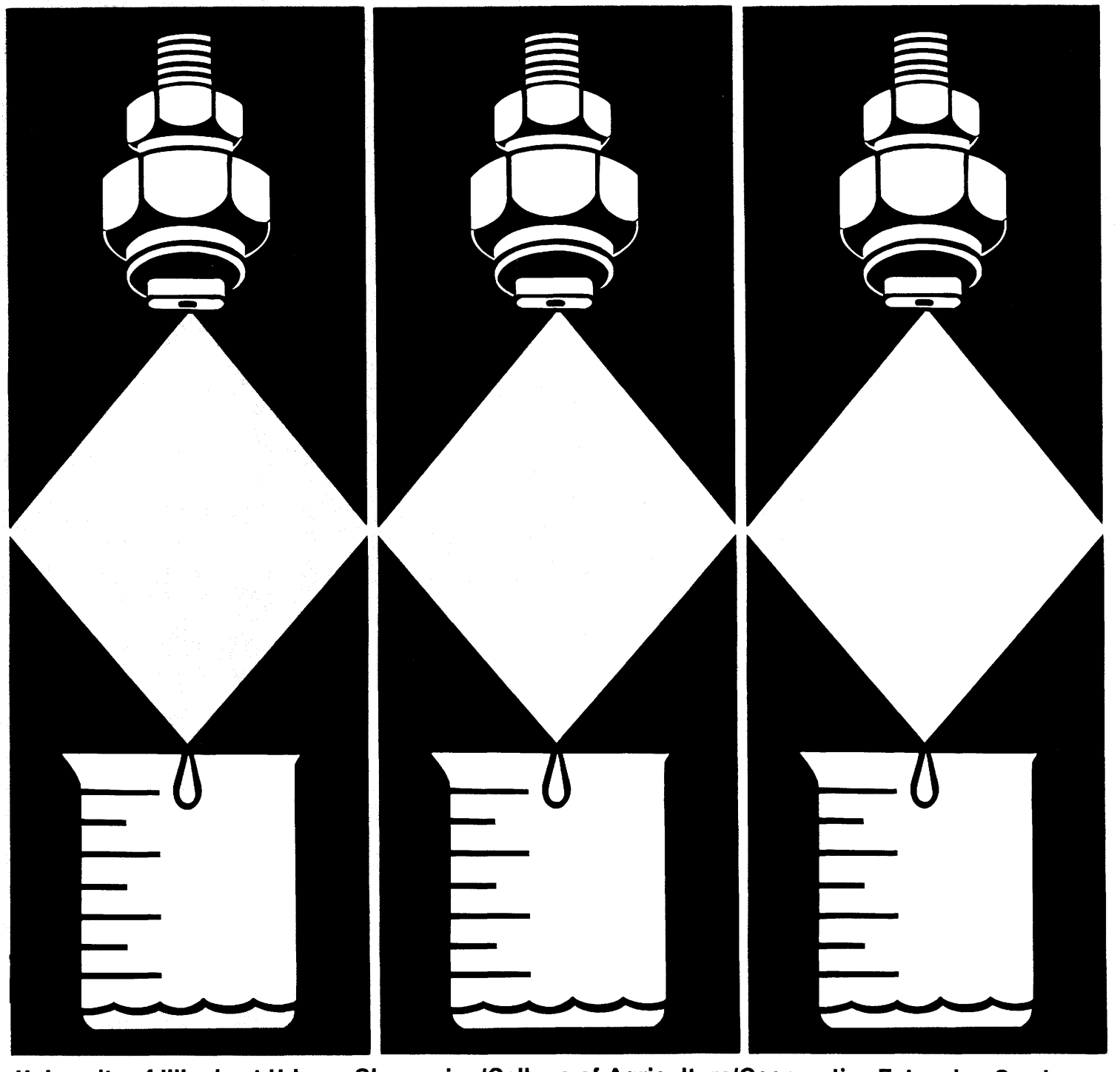

University of Illinois at Urbana-Champaign/College of Agriculture/Cooperative Extension Service

Preface

This circular is the first in a series of publications dealing with application equipment and the calibration of low-pressure sprayers, granular applicators, high-pressure sprayers, air-carrier sprayers, small-capacity sprayers and dusters, and aerial sprayers and granular applicators.

The calibration method described here has three important advantages over most other methods. First, it allows the operator to select the number of gallons to apply per acre and to complete almost all of the calibration before going to the field. Second, it provides a simple means for frequently adjusting the calibration to compensate for changes because of nozzle wear. Third, it can be used for broadcast, band, directed, and row-crop spraying.

We wish to thank Stephen L. Pearson of the Department of Agricultural Engineering for reviewing the material in this circular and making many helpful suggestions.

L. E. Bode
B. J. Butler

Contents

EQUIPMENT

Pumps 1
Tanks 3
Agitation of Chemicals 5
Flow-Control Assembly 5
Strainers 6
Distribution Systems 8
Nozzles 8

CALIBRATION

Variables Affecting Application Rate 12
Selecting the Proper Nozzle Tip 12
Precalibration Checking 13
Calibrating Your Sprayer 14
Maintenance and Cleaning 15

APPENDIX

Measuring Ground Speed 17
Mixing Pesticides 17
Determining Spray Rate with Installed Nozzle Tips 18

Equipment

More pesticides are applied with low-pressure sprayers than with any other kind of equipment. These sprayers apply chemicals to control weeds, insects, and diseases in field crops, ornamentals, turf, fruits, vegetables, rights-of-way, etc. Tractor-mounted, pull-type, and self-propelled sprayers are available in many models. Spray pressures range from nearly 0 to about 200 psi, and application rates can vary from 10 to over 100 gallons per acre. All low-pressure sprayers have several basic components: a pump, a tank, an agitation system, a flow-control 'assembly, and a distribution system.

PUMPS

The pump is the "heart" of the sprayer. Although diaphragm pumps are popular overseas, only roller and centrifugal pumps are used extensively on low-pressure sprayers in the United States.

Regardless of type, the pump must provide the necessary flow rate at the desired pressure. It should pump enough spray liquid to supply the gallons per minute (GPM) required by the nozzles and the tank agitator, with a reserve capacity of 10 to 20 percent to allow for some flow loss as the pump becomes worn.

Pumps are not 100 percent efficient. They have losses because of drive friction, leakage, etc. When estimating the pump horsepower needed for an application, an efficiency (Eff) of 50 to 60 percent should be used. The horsepower required to drive the pump can be estimated by using the following formula:

$$Hp = \frac{GPM \times psi}{1{,}714 \times Eff}$$

Example: How much Hp is required to run a pump if the maximum output of the pump is 50 GPM at 40 psi? Assume a pump efficiency of 50 percent.

$$Hp = \frac{50 \times 40}{1{,}714 \times 0.50} = 2.33$$

Because of inefficiencies of the drive units, electric motors should be about one-third larger than the calculated horsepower. Gasoline engines should be from one-half to two-thirds larger than the pump horsepower required.

Roller Pumps

Roller pumps are popular for smaller sprayers because of their low initial cost, compact size, easy repairability, and efficient operation at tractor power take-off (PTO) speeds. Roller pumps are positive-displacement pumps, and are self-priming. There is a wide assortment of roller pumps from which to choose, with normal outputs ranging from 5 to 30 gallons per minute and maximum pressures ranging from 150 to 300 psi.

Roller pumps have a slotted rotor that revolves in an eccentric (nonsymmetrical) case. Rollers in the slots seal the spaces between the rotor and the wall of the case. As the rollers pass the pump inlet, the spaces around the rollers enlarge and are filled with liquid drawn through the suction hose. When the rollers approach the pump outlet, the spaces become smaller, and the fluid is forced through the outlet. Pump output is determined by the length and diameter of the case, its eccentricity, and the speed of rotation.

Roller pumps are usually constructed with cast iron or corrosion-resistant housings and rotors; nylon, Teflon, or rubber rollers; and Viton, rubber, or leather seals. The type of material selected depends upon the chemical being pumped.

Nylon or Teflon rollers have proved to be the most resistant to agricultural chemicals, and are recommended for multipurpose sprayers. Rubber rollers are preferable when the pump is to be used only for water solutions and wettable powder slurries at pressures under 100 psi. Sand or scale is abrasive to the rollers, and the solution being pumped must not contain these materials.

Polypropylene rollers wear better than either nylon or rubber rollers when applying weak solutions or solutions with little or no lubricating qualities. Some operators have had problems with excessive wear of the rollers, especially when using wettable powders. Other operators have maintained long pump life by operating the pump at all times when using wettable powders, by proper maintenance and storage of the pump, and by keeping abrasive materials out of the sprayer.

Centrifugal Pumps

Centrifugal pumps are the most popular type used for low-pressure sprayers. They are durable, simply constructed, and can readily handle wettable powders and abrasive materials. Because of the high output of centrifugal pumps (70 to 130 GPM), the spray solution can be agitated sufficiently even in large tanks. The initial cost of a centrifugal pump is somewhat higher than that of a roller pump, but its long life and low maintenance make it an economical choice.

Centrifugal pumps develop pressure as a result of centrifugal force. In most centrifugal pumps, the

Roller Pump Spraying System

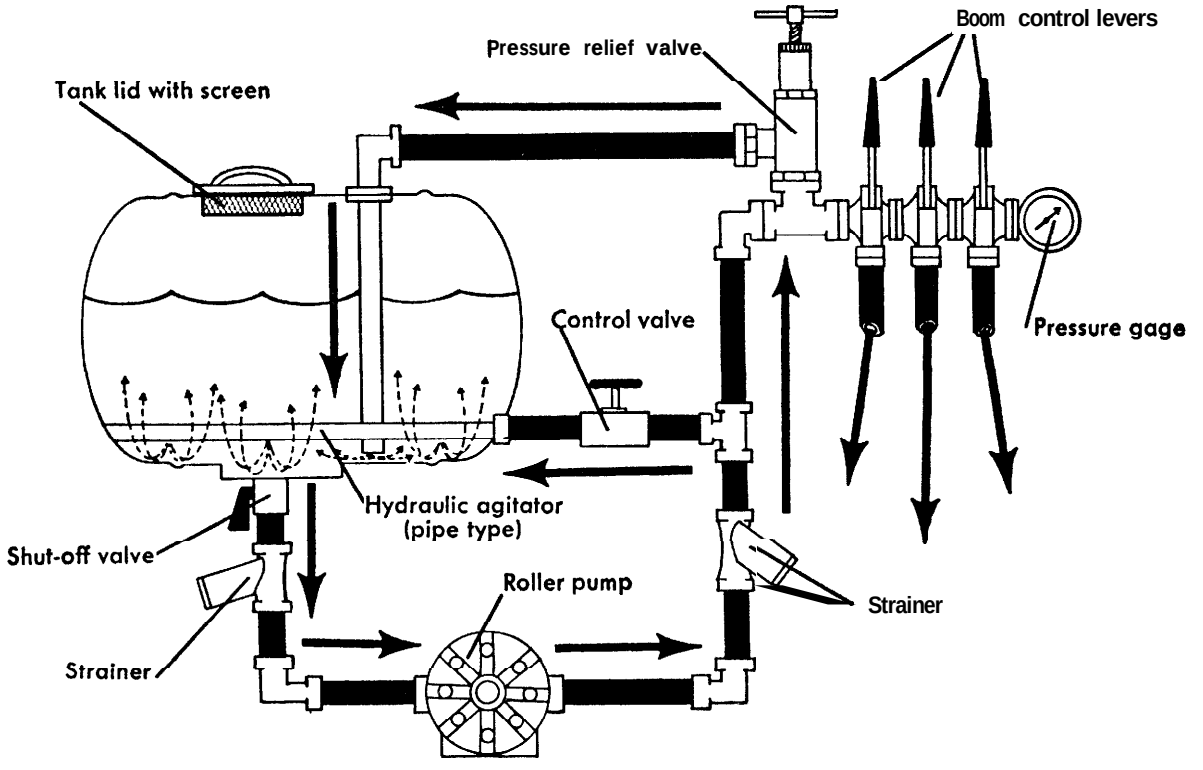

Centrifugal Pump Spraying System

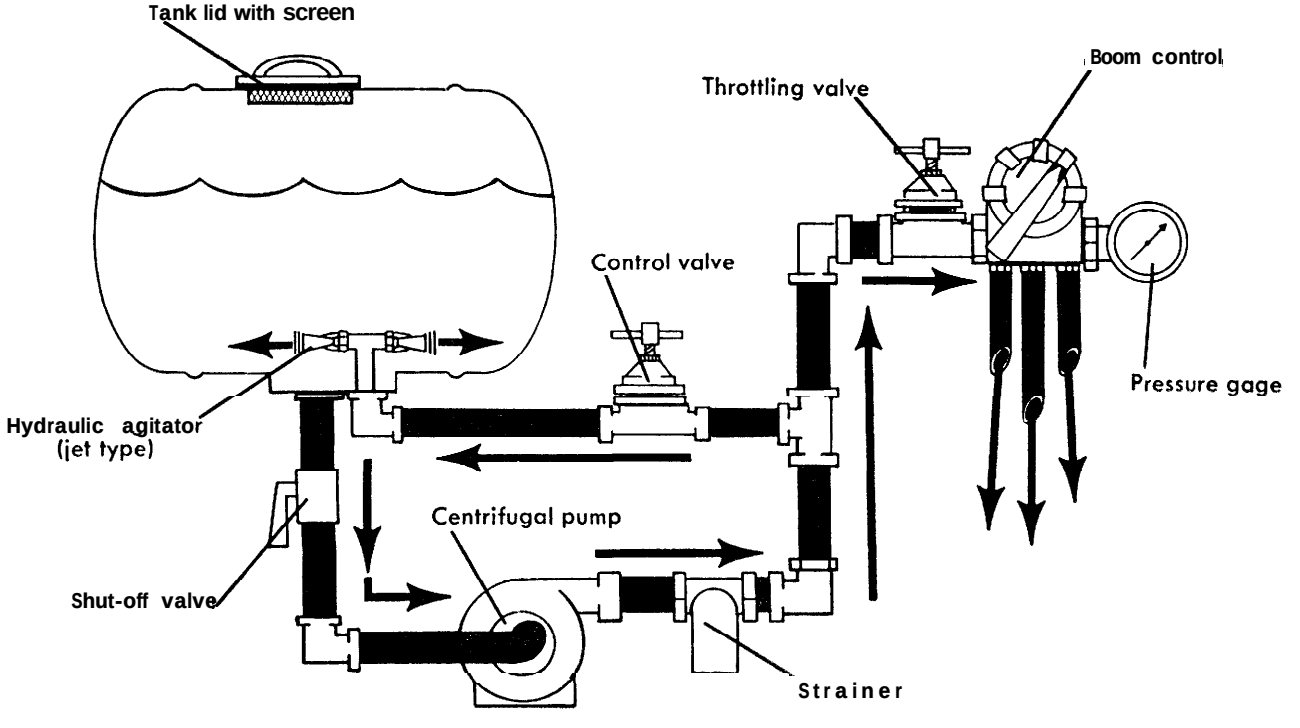

spray material is fed into the center of a high-speed impeller, and is thrown outward, radially, into the pump casing. The high-velocity spray material is forced out the pump outlet, generating pressure in the outlet line. Efficiency in developing outlet pressure depends upon the design of the pump, especially the diameter and speed of the rotating impeller.

Centrifugal pumps for low-pressure spraying are capable of developing pressures up to 70 psi when the impellers are running between 3,000 and 4,500 rpm The output volume drops off rapidly when the outlet pressure is above 30 to 40 psi. This decrease in volume can be an advantage because it permits controlling nozzle pressure without a relief valve.

The need to operate at high impeller speeds requires some kind of step-up speed mechanism when operating centrifugal pumps from power take-off (PTO) shafts. The simplest and least expensive is a belt-and-sheave assembly. Other step-up mechanisms have planetary gears that are completely enclosed and mounted directly on the PTO shaft. Another method of driving a centrifugal pump is with a close-coupled, high-speed hydraulic motor. Using the tractor hydraulic system to drive the pump keeps the tractor PTO shaft free for other uses. Pumps can also be driven by direct-coupled gasoline engines when other drive mechanisms cannot be used.

Single-stage centrifugal pumps designed to operate at speeds up to 6,000 rpm and generate pressures up to 150 psi are now available. Although these pumps supply the higher pressures required for some foliar applications, they require more care in pressure control to prevent damage to other components when the boom is closed. Multiple-stage centrifugal pumps will provide high pressures at lower speeds, but they are much more expensive than single-stage centrifugal pumps.

Turbine pumps are also available for low-pressure sprayers. These pumps are similar to centrifugal pumps except that they can provide the normal capacity and pressures up to 70 psi when mounted directly on a l,OOO-rpm PTO shaft, eliminating the need for step-up mechanisms.

The capacity of centrifugal pumps varies directly with the speed; the pressure varies as the square of the speed; and power consumption varies as the cube of the speed. Since centrifugal pumps are not self priming, they should be mounted below the supply tank to aid in priming. In addition, a small vent tube should be installed from the top of the pump housing to the supply tank. This positive vent line allows the pump to prime itself by "bleeding off" trapped air when the pump is not operating and upon starting.

The inlet of a centrifugal pump should *never* be restricted. A partially clogged suction strainer, collapsed suction line, or a suction line with insufficient capacity will result in a loss of pressure control and possible damage to the pump. Since centrifugal pumps can handle small pieces of foreign material without damage, a suction strainer is not always required. If a suction strainer is used, it must be capable of handling the large capacities of the pump with a minimum drop in pressure across the strainer, and must be cleaned frequently.

TANKS

Sprayer tanks should be large enough so that they do not need to be refilled frequently. They also should be corrosion-resistant, easy to fill and clean, shaped suitably for mounting and effective agitation, and have adequate openings for pump and hydraulic or mechanical agitation connections.

The capacity at various levels should be clearly marked on the tank. If the tank is not transparent, it should have a sight gage or other external means of determining the fluid level. Sight gages should have shutoff valves at the bottom to permit closing in case of failure. The opening of the tank should be fitted with a cover that can be secured to avoid spills or splashes The opening should be large enough to facilitate cleaning the tank. The drain should open through the bottom so that the tank can be completely emptied.

Fiberglass tanks are widely used on all types of sprayers and applicators and as nurse tanks. Fiberglass is strong and durable, but it will break or crack under impact. One advantage of fiberglass over polyethlene is that repair kits are available for "on-farm" use, or a spray-equipment, dealer can make repairs. Fiberglass tanks are about equal to aluminum in cost, and can be used with most chemicals. They may, however, be affected by certain kinds of solvents.

Stainless steel tanks are strong, durable, and resistant to corrosion by any crop chemical. Because stainless steel is the most expensive material used for pesticide and fertilizer applicator tanks, only equipment with high annual use is commonly equipped with stainless steel tanks.

Gaivanized steel tanks are inexpensive, and can be constructed in almost any size or shape. They are easy to repair or modify. Corrosion is the biggest drawback. Even with protective coatings, chemicals can cause rapid rusting. Rust flakes off, plugging the nozzles, clogging the strainers, and damaging the pumps. Galvanized tanks and recycled barrels are suitable for most pesticides, but they should not be used with the

Typical Roller Pump (Cutaway)

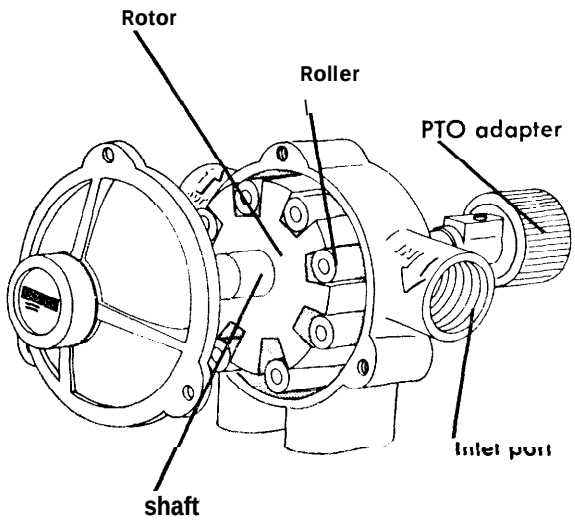

Typical Centrifugal Pump (Cutaway)

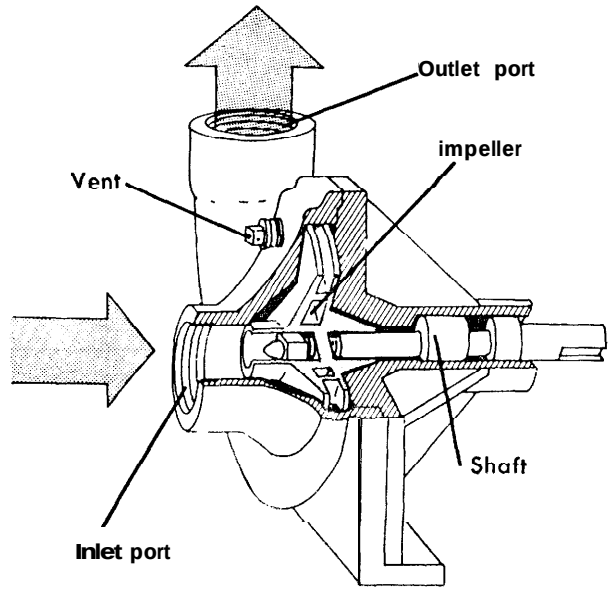

Performance Curve

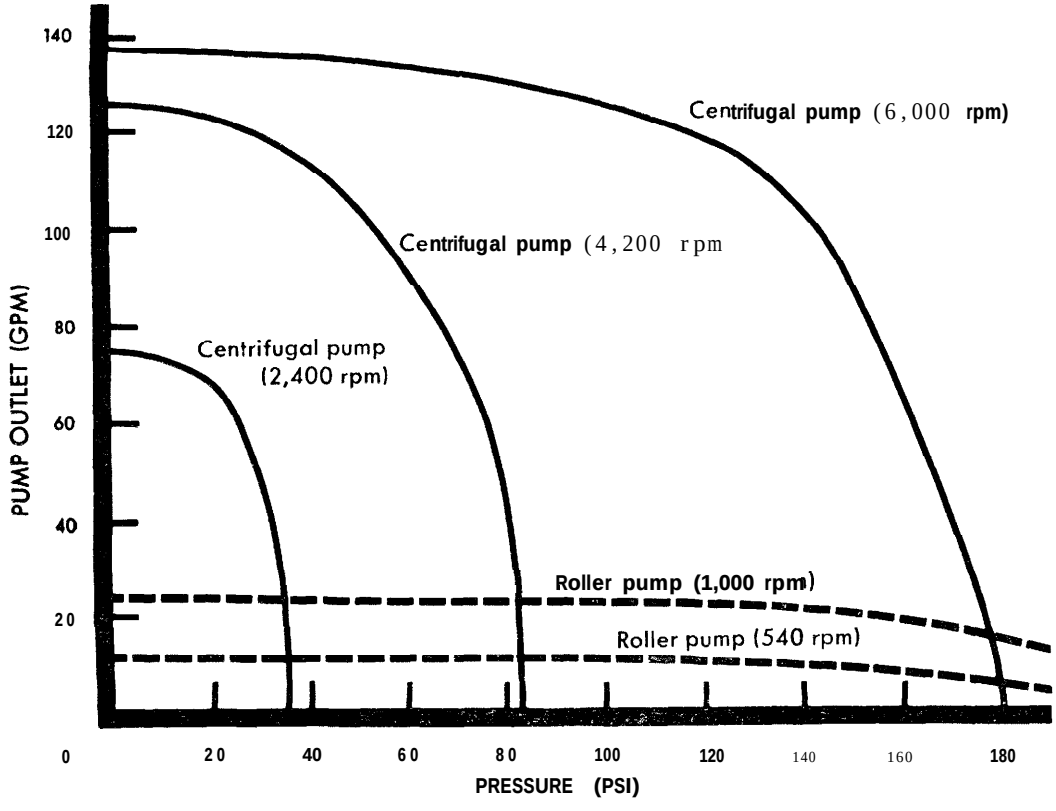

more corrosive liquid fertilizers insecticides, and nematicides.

Aluminum tanks are moderate in cost, resist corrosion, and are suitable for many chemicals. They should not, however, be used for liquid nitrogen solutions with a phosphoric acid base. A few pesticides can also cause rapid corrosion. These pesticides usually have proper warnings on the label.

Polyethylene tanks are relatively inexpensive and are available in many sizes and shapes. The development of high-quality polyresins provides improved control of stress cracking and assures compatibility with commonly used agricultural chemicals. Polyethylene tanks are tough and durable. If a tank is cracked or broken, however, it must be replaced because there is no effective way to repair it. Because polyethylene breaks down under ultraviolet light, inhibitors are added for protection against sunlight. Nonetheless, it is best to keep these tanks out of direct sunlight when not in use.

When barrels or small metal tanks are used, the tank mounting is not critical. Polyethylene and fiberglass tanks must be properly mounted on a "saddle" that supports the tank over a large area. Without a saddle, the weight of the liquid could break the tank as the sprayer bounces over obstructions or rough terrain.

AGITATION OF CHEMICALS

Agitation requirements depend largely upon the formulation of the chemical being applied. Soluble liquids and powders do not require special agitation once they are in solution, but emulsions, wettable powders, and liquid and dry flowables will usually separate if they are not agitated by some means. Separation causes the concentration of the pesticide spray to vary greatly as the tank empties. For this reason, thorough agitation is essential. Either mechanical paddles or hydraulic jets can be used to agitate the spray solution.

Mechanical agitators are propellers or paddles mounted on a shaft near the bottom of the tank. The shaft usually rotates at 100 to 200 rpm. Excessive agitator speeds can cause foaming in some spray mixtures.

Hydraulic agitation is most commonly used on low-pressure sprayers. The fluid is circulated by returning a portion of the pump output to the tank and discharging it under pressure through holes drilled in a pipe running the entire length of the tank or through special agitator nozzles. Jet agitation is simple and effective provided that the device is installed correctly and there is sufficient flow. The agitator orifices should receive fluid from a separate line on the discharge side of the pump and not merely from the by-pass line.

The amount of flow needed for agitation depends upon the chemical used, as well as upon the size and shape of the tank. For a simple orifice jet agitator, a flow of 6 GPM for every 100 gallons of tank capacity is usually adequate. There are several types of siphon attachments available that will help stir the tank with less flow. If these are used, the agitator flow from the pump can be reduced to 2 to 3 GPM for every 100 gallons of tank capacity. Foaming can occur if the agitation flow rate remains constant as the tank empties. This condition can be prevented by using a control valve to gradually reduce the amount of agitator flow.

Hydraulic Agitators

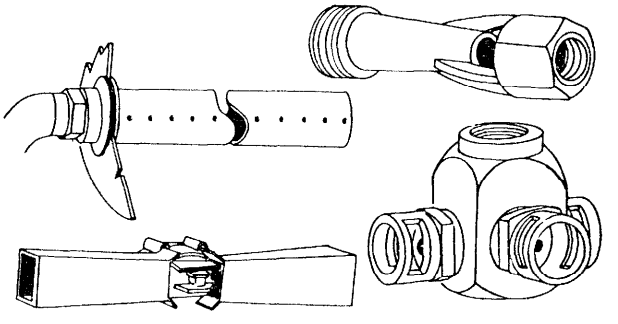

FLOW-CONTROL ASSEMBLY

A roller pump or other positive-displacement pump usually has a flow-control assembly consisting of a by-pass-type pressure regulator or relief valve a control valve, a pressure gage, and a boom shut-off valve. By-pass pressure-relief valves usually have a spring-loaded ball, disc, or diaphragm that opens with increasing pressure so that excess flow is bypassed back to the tank, preventing damage to the pump and other components when the boom is shut off.

When the control valve in the agitation line and the by-pass relief valve in the by-pass line are adjusted properly, the spraying pressure will be regulated. To adjust the system properly, follow these steps: (1) close the control valve in the agitation line and open the boom valve; (2) start the sprayer and run the pump at operating speed; then adjust the relief valve until the pressure gage reads about 10 psi above the desired spraying pressure; and (3) slowly open the control valve (agitation line) until the spraying pres-

sure is reduced to the desired level. If the pressure cannot be lowered sufficiently even with the control valve open, use larger orifice caps in the jet agitator, or use an agitator tube with larger orifices.

If there is insufficient agitation even when the spraying pressure is correct and the relief valve is closed, install a smaller orifice in the agitator. Agitation is increased because the control valve can be opened wider at the same pressure.

Because the output of a centrifugal pump can be completely closed without damage to the pump, a pressure-relief valve and separate by-pass line are not needed. The spray pressure can be controlled with simple gate or globe valves.

It is preferable, however, to use special throttling valves that are designed to control the spraying pressure accurately. Electric-controlled throttling valves are becoming popular for remote pressure control. These valves are especially useful for enclosed cabs.

The spray pressure is controlled with two throttling or control valves-one in the agitation line and the other in the spray boom line — permitting control of agitation flow independently of nozzle flow. To adjust for spraying, follow these steps: (1) prime the pump with all valves open; (2) close both valves and, with the pump runnin, open the boom control valve until the pressure gage indicates the desired spray pressure; and (3) open the agitation line valve until you have sufficient agitation. If the agitation Ilow has lowered the pressure, readjust the boom control valve to restore the desired pressure.

A pressure gage must be included in every sprayer system because nozzles are designed to operate within certain pressure limits. The importance of a good pressure gage cannot be overemphasized. The pressure gage must be used for calibrating and while operating in the field. Select a gage for the pressure range that you will be using. A range of 0 to 60 psi is adequate for herbicides and most other pesticides. When a 150-psi **gage is** used for operating at 20 psi, accurate pressure adjustment is difficult, if not impossible.

A quick-acting boom cut-off or control valve allows the sprayer boom to be shut off while the pump and the agitation system continue to operate. Electric solenoid valves, which eliminate inconvenient hoses and plumbing, are also available.

STRAINERS

Three types of strainers are commonly used on low-pressure sprayers: tan k-filler strainers, line strainers, and nozzle strainers. The strainer numbers (20-mesh, 50-mesh, etc.) indicate the number of openings per inch. Strainers with high mesh numbers have smaller openings than strainers with low mesh numbers.

Coarse basket strainers set in the tank-filler opening prevent twigs, leaves, and other debris from entering the tank as it is being filled. A 16- or 20-mesh tank-filler strainer will restrain Iumps of wettable powder until they are broken up, helping to give uniform tank mixing.

A suction-line strainer should be used between the tank and a roller pump to prevent rust, scale, or other material from damaging the pump. A 40- or 50-mesh strainer is recommended. A suction-line strainer is not usualIy needed to protect a centrifuga1 pump except against Iarge pieces of foreign material.

The inlet of a centrifugal pump *must not* be restricted. If a strainer is used, it should have an effective straining area several times larger than the area of the suction line, be no smaller than 2O-mesh, and should be cleaned frequently. A line strainer (usually 50-mesh) should be located on the pressure side of the pump to protect the spray nozzles and agitation nozzles.

Small-capacity nozzles must have a strainer of the proper size to stop any particle that may plug the nozzle orifice. These strainers vary in size, depending upon the size of the nozzle tip used, but they are commonly 50- or lOO-mesh. Nozzle catalogs list a recommended mesh size for each nozzle tip.

In general, 1 00-mesh strainers are recommended for most nozzles with a flow rate below 0.2 GPM and 50-mesh strainers for nozzles with a flow rate between 0.2 and 1 GPM if a good line strainer is used, no nozzle strainer is needed for nozzles with flow rates above 1 CPM. When applying wettable powders do not use nozzles with a flow rate less than 0.2 GPM. Use 50-mesh or larger strainers to prevent clogging the screens with the powder. Finer strainers, such as mesh, can be used to protect small nozzles when applying liquid concentrates, emulsions, and soluble powders.

Line Strainers

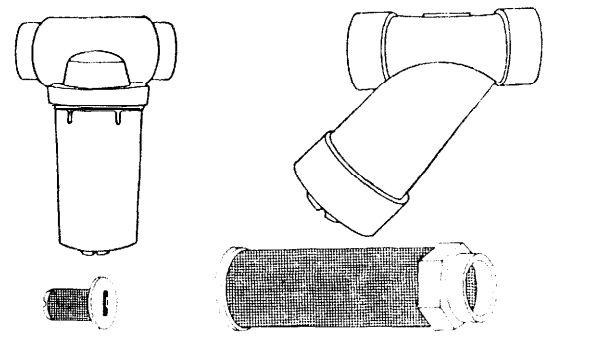

Pressure Relief Valves (Roller Pumps)

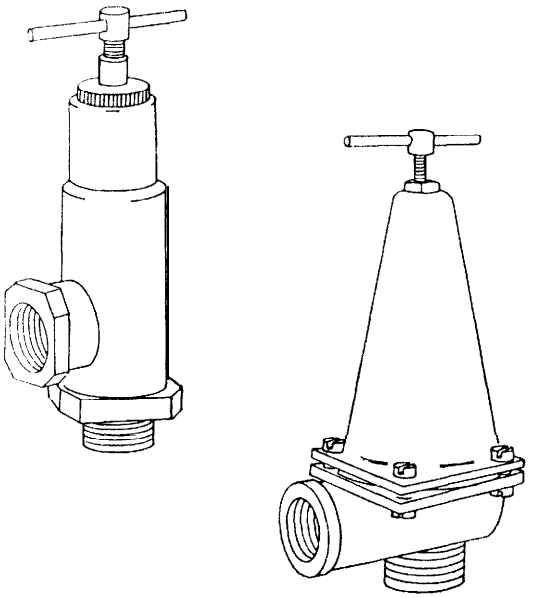

Throttling Valves (Centrifugal Pumps)

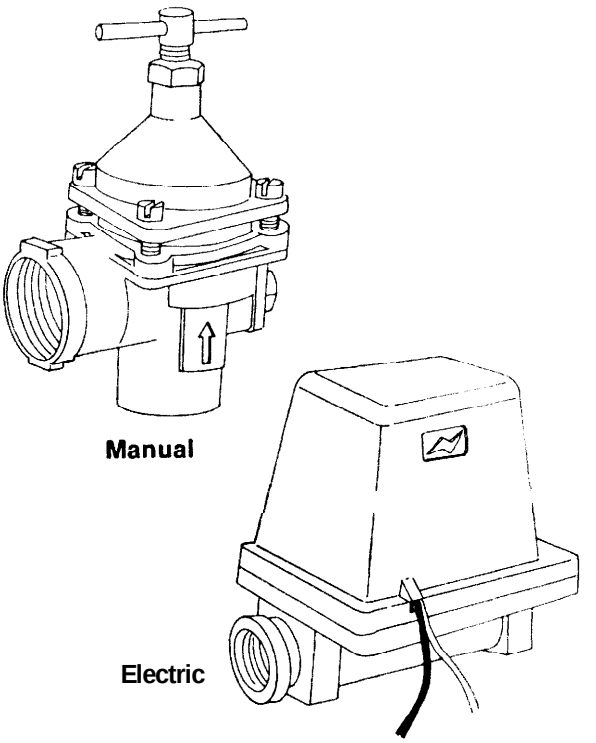

Boom Cut-off Valves

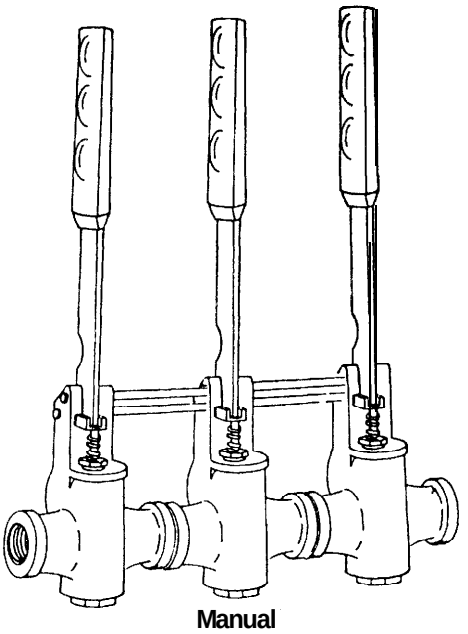

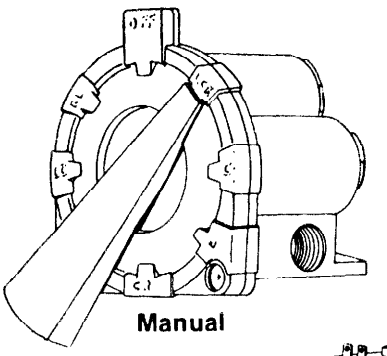

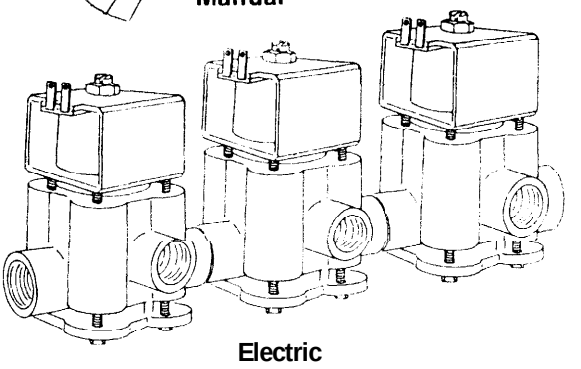

DISTRIBUTION SYSTEMS

All hoses and fittings should be of a suitable quality and strength to handle the chemicals at the selected operating pressure. They should be chosen on the basis of composition, construction, and size.

A good hose is flexible, durable, and resistant to sunlight, oil, chemicals, and general abuse such as twisting and vibration. The hose must be resistant to the chemical action of spray materials. The outer coating of the hose should be chemically resistant because spray may occasionally contact it. Two widely used materials that are generally chemically resistant are ethylene vinyl acetate (EVA) and ethylene propylene dione monomer (EPDM). A special reinforced hose must be used for suction lines to prevent collapsing.

Peak pressures are often encounter-cd that are much higher than average operating pressures. These peak pressures usually occur as the spray boom is shut off. For this reason, the sprayer hoses and fittings ***must be in good condition*** to prevent a possible break and the operator being covered with the spray chemical.

Spray lines and suction hoses must be the proper sizes for the system. The suction hoses should be airtight, noncollapsible, as short as possible and as large as the pump intake. A collapsed suction hose can restrict flow and "starve" a pump, causing decreased flow and damage to the pump or pump seals. When you cannot maintain spray pressure, check the suction line to be sure that it is not restricting flow.

Other lines, especially those between the pressure gage and the nozzles, should be as straight as possible, with a minimum of restrictions and fittings. The proper size of these lines varies with the size and capacity of the sprayer. A high but not excessive fluid velocity should be maintained throughout the system. If the lines are too large, the velocity will be so low that the pesticide will settle out and clog the system. If the lines are too small, an excessive drop in pressure will occur. A flow velocity of 5 to 6 feet per second is recommended. The suggested hose sizes for various pump flow rates are listed below.

Pump output (GPM)	Hose sizes: Suction (inches)	Hose sizes: Pressure (inches)
O-1	½	¼
1-3	½	⅜
3-6	¾	½
6-12	¾	⅝
12-25	1	¾
25-50	1¼	1
50-100	1½	1¼

Boom stability is important in achieving uniform spray application. The boom should be relatively rigid in all directions, Swinging back and forth or up and down is undesirable. The breakaway hinge arrangement of the boom should be dampened so that the boom is rigid in the fore and aft direction. The boom should be constructed to permit folding for transport. Check for interference of the folded booms with tractor cabs and roll bars. The boom height should be adjustable from about 1 to 4 feet above the ground.

Certain commonly used chemicals will react with some plastic materials. Check with the sprayer manufacturer and the chemical manufacturer for compatibility.

NOZZLES

The proper selection of nozzle type and size is the most important part of pesticide application. The nozzle determines the amount of spray applied to a particular area, the uniformity of the applied spray, the coverage obtained on the sprayed surfaces, and the amount of drift. You can minimize the drift problem by selecting nozzles that give the largest drop size, while providing adequate coverage at the intended application rate and pressure. Although nozzles have been developed for practically every kind of spray application, only a few types are commonly used on low-pressure sprayers. These types are described below.

Regular Flat-Fan Nozzles

Regular flat-fan nozzles are used for most broadcast spraying of herbicides and for certain insecticides when foliar penetration and coverage are not required. These nozzles produce a tapered-edge, flat-fan spray pattern, and are available in several selected spray-fan angles, although 80-degree spray-angle tips are most commonly used. The nozzles are usually on 20-inch centers at a boom height of 10 to 23 inches. The boom heights for various spray angles are shown below.

Spray angle (degrees)	Boom height, 20-inch spacing finches)
65	21-23
73	20-22
80	17-19
110	10-12

When applying herbicides with flat-fan nozzles, keep the operating pressure between 15 and 30 psi. At these pressures flat-fan nozzles produce medium-to-coarse drops that are not as susceptible to drift as the finer drops produced at pressures of 40 psi and higher. Regular flat-fan nozzles are recommended for

some foliar-applied herbicides at pressures from 40 to 60 psi. These high pressures will generate fine drops for maximum coverage on the plant surface.

Because the outer edges of the spray pattern have tapered or reduced volumes, adjacent patterns along a boom must overlap in order to obtain uniform coverage. For maximum uniformity, this overlap should be about 40 to 50 percent of the nozzle spacing.

The LP or "low-pressure" flat-fan nozzle is available from the Spraying Systems Company. This nozzle develops a normal fan angle and distribution pattern at spray pressures from 10 to 25 psi. Operating at a lower pressure results in larger drops and less drift than the regular flat-fan nozzle designed to operate at pressures of 15 to 30 psi.

Even Flat-Fan Nozzles

Even flat-fan nozzles apply uniform coverage across the entire width of the spray pattern. They should be used only for banding pesticides over the row, and should be operated between 15 and 30 psi. Band width is determined by adjusting nozzle height. The band widths for various nozzle heights are shown below.

	Nozzle height	
Band width (inches)	*80-degree series*	*95-degree series*
	(inches)	
8	5	4
10	6	5
12	7	6
14	8	7

Flooding Flat-Fan Nozzles

Flooding flat-fan nozzles produce a wide-angle, flat-fan pattern, and are used for applying herbicides and mixtures of herbicides and liquid fertilizers. The nozzle spacing for applying herbicides should be 60 inches or less. These nozzles are most effective in reducing drift when they are operated within a pressure range of 8 to 25 psi. Pressure changes affect the width of spray pattern more with the flooding flat-fan nozzle than with the regular flat-fan nozzle. In addition, the distribution pattern is usually not as uniform as that of the regular flat-fan tip. The best distribution is achieved when the nozzle is mounted at a height and angle to obtain at least double coverage or loo-percent overlap.

Flooding nozzles can be mounted so that they spray straight down, straight back, or at any angle in between. Position is not critical as long as double coverage is obtained. You can determine nozzle position by rotating the nozzle to the angle required to obtain double coverage at a practicable nozzle height.

Hollow-Cone Nozzles (Disc and Core Type)

Hollow-cone nozzles are used primarily when plant foliage penetration is essential for effective insect and disease control, and when drift is not a major concern. At pressures of 40 to 80 psi, hollow-cone nozzles produce small drops that penetrate plant canopies and cover the undersides of leaves more eflectively than other nozzles. If penetration is not required, the pressure should be limited to 40 psi or less. The most commonly used hollow-cone nozzle is the two-piece, disc-core, hollow-cone spray tip. The core gives the fluid a swirling motion before it is metered through the orifice disc, resulting in a circular, hollow-cone spray pattern.

Whirl-Chamber Hollow-Cone Nozzles

Whirl-chamber nozzles have a whirl chamber above a conical outlet. These nozzles produce a hollow-cone pattern with fan angles up to 130 degrees, and are used primarily on herbicide incorporation kits. The recommended pressure range is 5 to 20 psi.

Raindrop Hollow-Cone Nozzles

Raindrop nozzles have been designed by the Delavan Corporation to produce large drops in a hollow-cone pattern at pressures of 20 to 60 psi. The RD Raindrop nozzle consists of a conventional disc-core, hollow-cone nozzle to which a Raindrop cap has been added. The RA Raindrop nozzle (a whirl-chamber nozzle with the Raindrop cap) is used for herbicide incorporation, and the RD Raindrop nozzle for foliar spraying. When used for broadcast application, these nozzles should be rotated 30 to 45 degrees from the horizontal to obtain uniform distribution.

Material s

Nozzle tips are available in a wide variety of materials, including hardened stainless steel, stainless steel, nylon, and brass. Hardened stainless steel is the most wear-resistant material, but it is also the most expensive. Stainless steel tips have excellent wear resistance with either corrosive or abrasive materials. Although nylon and other synthetic plastics are resistant to corrosion and abrasion, they are subject to swelling when exposed to some solvents. Brass tips are the most common, but they wear rapidly when used to apply abrasive materials such as wettable powders, and are corroded by some liquid fertilizers. Brass tips are probably the most economical for limited use, but other types should be considered for more extensive use. The figure on page 10 shows the wear rates of a regular flat-fan nozzle constructed of various materials.

Flooding Nozzle Operating Positions

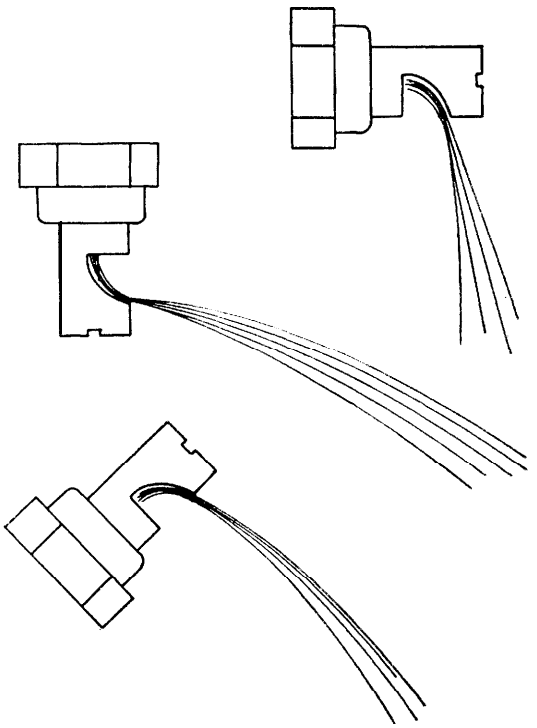

Spray Overlap (50 Percent)

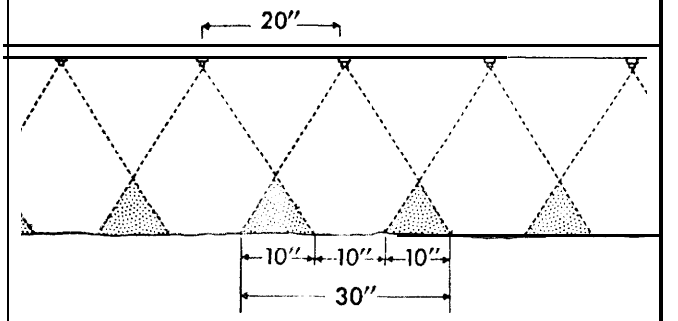

Spray Overlap (100 Percent)

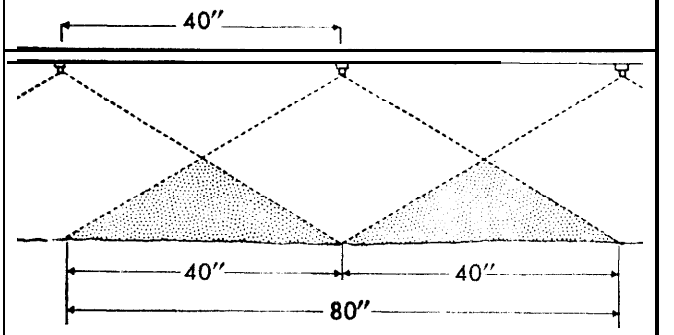

Wear Rates of Various Materials (Regular Flat-Fan Nozzle)

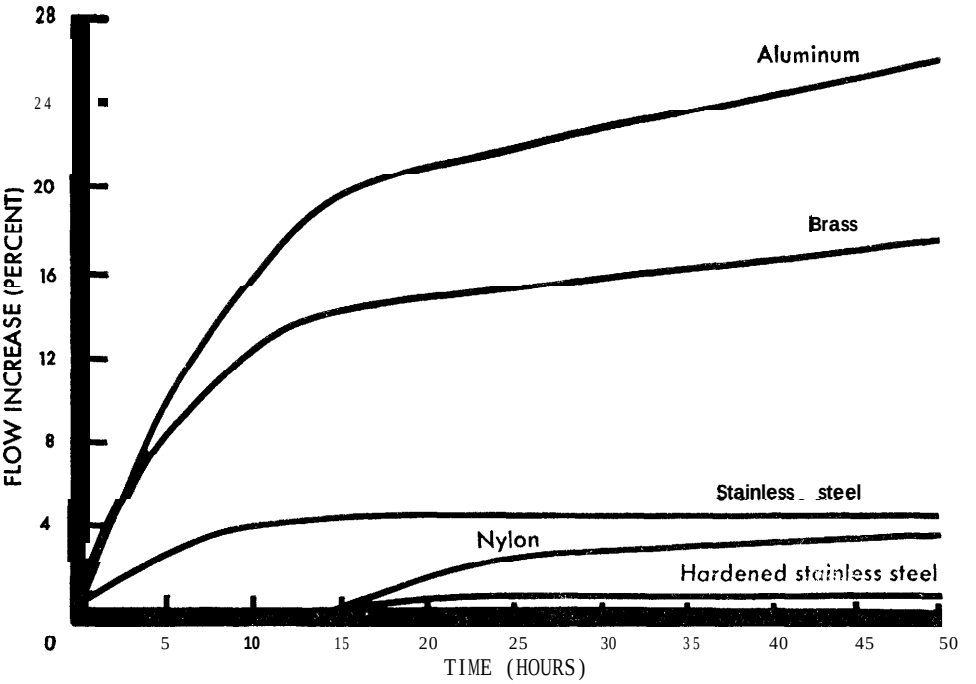

Nozzle Spray Patterns

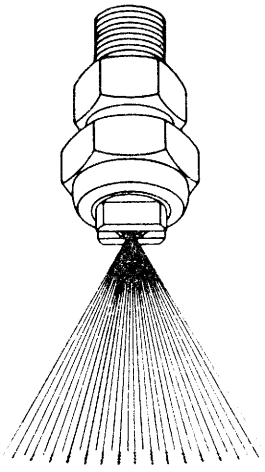

Regular Flat Fan

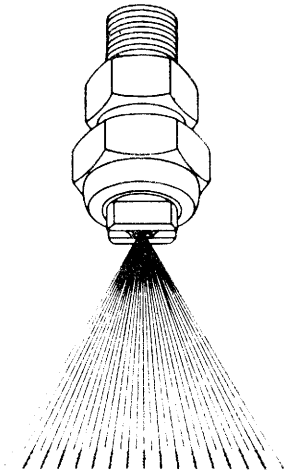

Even Flat Fan

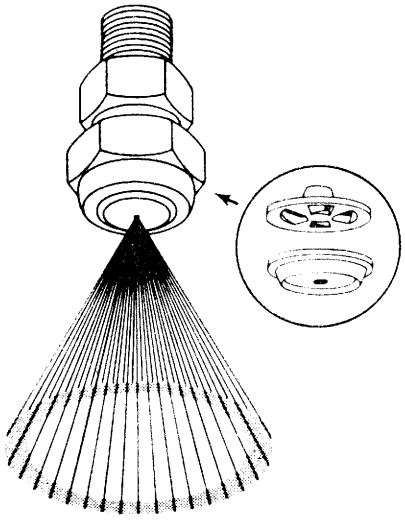

Hollow Cone

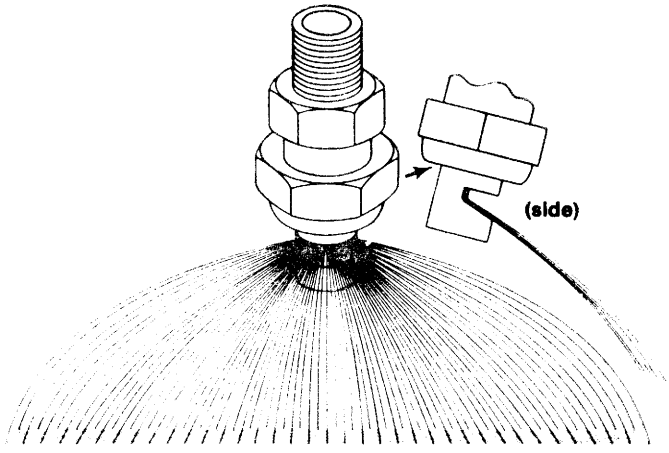

Flooding Flat Fan

(front)

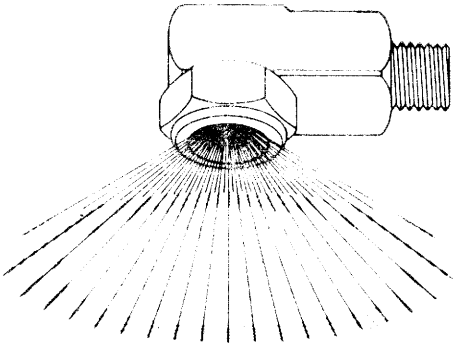

Whirl Chamber

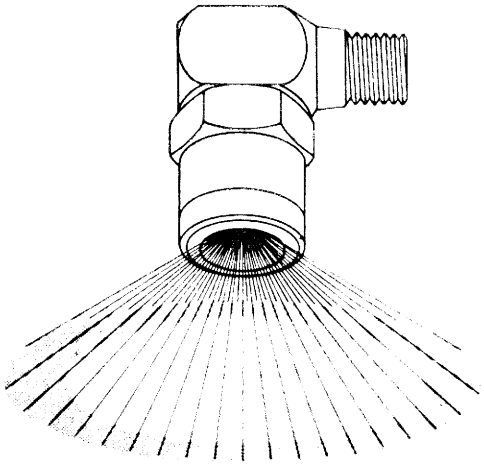

RA Raindrop®

Calibration

The performance of any pesticide depends upon the proper application of the correct amount of chemical. Most performance complaints about agricultural chemicals are directly related to errors in dosage or to improper application. The purpose of calibration is to insure that your sprayer is applying the correct amount of material uniformly over a given area.

VARIABLES AFFECTING APPLICATION RATE

Three variables affect the amount of spray mixture applied per acre: (1) the nozzle flow rate; (2) the ground speed of the sprayer; and (3) the effective sprayed width per nozzle. To calibrate and operate your sprayer properly, you must know how each of these variables affects sprayer output.

Nozzle Flow Rate

The flow rate through a nozzle varies with the size of the tip and the nozzle pressure. Installing a nozzle tip with a larger orifice or increasing the pressure will increase the flow rate. Nozzle flow rate varies in proportion to the square root of the pressure. **Doubling the pressure will not double the flow rate. To double the flow rate, you must increase the pressure four times.** For example, to double the flow rate of a nozzle from 0.28 GPM at 20 psi to 0.56 GPM, you must increase the pressure to 80 psi (4 X 20).

Pressure cannot be used to make major changes in application rate, but it can be used to correct minor changes because of nozzle wear. To obtain a uniform spray pattern and minimize drift hazard, you must keep the operating pressure within the recommended range for each nozzle type. Remember — if you use check valves to prevent nozzle drip, the pressure at the nozzle is 5 to 7 psi lower than the boom pressure indicated on the pressure gage.

Ground Speed

The spray application rate varies *inversely* with the ground speed. **Doubling the ground speed of the sprayer reduces the gallons of spray applied per acre (GPA) by one-half.** For example, a sprayer applying 20 GPA at 3 MPH would apply 10 GPA if the speed were increased to 6 MPH and the pressure remained constant.

Some low-pressure field sprayers are equipped with control systems that maintain a constant spray application rate (GPA) over a range of ground speeds. The pressure is changed to vary the nozzle flow rate according to changes in ground speeds. These systems require calibration at a set ground speed. In the field, speed changes must be limited to a range that maintains the nozzle pressure within its recommended range.

Sprayed Width per Nozzle

The effective width sprayed per nozzle also affects the spray application rate. **Doubling the effective sprayed width per nozzle decreases the gallons per acre (GPA) applied by one-half.** For example, if you are applying 40 CPA with flat-fan nozzles on 20-inch spacings, and change to flooding nozzles with the same flow rate on 40-inch spacings, the application rate decreases from 40 GPA to 20 CPA.

The gallons of spray applied per acre can be determined by using the following equation:

$$\text{(Equation 1)}\quad GPA = \frac{GPM \times 5{,}910}{MPH \times W}$$

GPM = output per nozzle in gallons per minute
MPH = ground speed in miles per hour
W = effective sprayed width per nozzle in inches
5,940 = a constant to convert gallons per minute, miles per hour, and inches to gallons per acre.

There are many methods for calibrating low-pressure sprayers, but they all involve the use of the variables in Equation 1. Any technique for calibration that provides accurate and uniform application is acceptable. No single method is best for everyone.

The calibration method described below has three advantages. First, it allows you to select the number of gallons to apply per acre and to complete most of the calibration before going to the field. Second, it provides a simple means for frequently adjusting the calibration to compensate for changes because of nozzle wear. Third, it can be used for broadcast, band, directed, and row-crop spraying. This method requires a knowledge of nozzle types and sizes and the recommended operating pressure ranges for each type of nozzle used.

SELECTING THE PROPER NOZZLE TIP

The size of the nozzle tip will depend upon the application rate (GPA) , ground speed (MPH), and effective sprayed width (W) that you plan to use. Some manufacturers advertise "gallons-per-acre" nozzles, but this rating is useful only for standard conditions (usually 30 psi, 4 MPH and 20-inch spacings). The gallons-per-acre rating is useless if any one of your conditions varies from the standard.

A more exact method for choosing the correct nozzle tip is to determine the gallons per minute (GPM) required for your conditions; then select nozzles that, when operated within the recommended pressure range, provide this flow rate. By following the five steps described below, you can select the nozzles required for each application well ahead of the spraying season.

Step **1.** Select the spray application rate in gallons per acre (GPA) that you want to use. Pesticide labels recommend ranges for various types of equipment. The spray application rate is the gallons of carrier (water, fertilizer, etc.) and pesticide applied per treated acre.

Step 2. Select or measure an appropriate ground speed in miles per hour (MPH) according to existing field conditions. Do not rely upon speedometers as an accurate measure of speed. Slippage and variation in tire sizes can result in speedometer errors of 30 percent or more. If you do not know the actual ground speed, you can easily measure it (see **Measuring Ground Speed,** page 17) .

Step 3. Determine the effective sprayed width per nozzle (W) in inches.

For broadcast spraying, W = the nozzle spacing;

For band spraying, W = the band width;

For row-crop applications, such as spraying from drop pipes or directed spraying,

$$W = \frac{\text{row spacing; (or band width)}}{\text{number of nozzles per row (or band)}}$$

Step 4. Determine the flow rate required from each nozzle in gallons per minute (GPM) by using a nozzle catalog, tables, or the following equation:

$$\text{(Equation 2) GPM} = \frac{\text{GPA X MPH X W}}{5{,}940}$$

GPM = gallons per minute of output required from each nozzle.

GPA = gallons per acre from Step 1.

MPH = miles per hour from Step 2.

W = inches sprayed per nozzle from Step 3.

5,940 = a constant to convert gallons per minute, miles per hour, and inches to gallons per acre.

Step 5. Select a nozzle that will give the flow rate determined in Step 4 when the nozzle is operated within the recommended pressure range. You should obtain a catalog listing available nozzle tips. These catalogs may be obtained free of charge from equipment dealers or nozzle manufacturers. If you decide to use nozzles that you already have, return to Step 2 and select a speed that allows you to operate within the recommended pressure range.

Example 1: You want **to** broadcast a herbicide at ***15*** GPA (Step 1) at a speed of 7 MPH (Step 2), using flooding nozzles spaced 40 inches apart on the boom (Step 3) . What nozzle tip should you select?

The required flow rate for each nozzle (Step 4) is as follows:

$$\text{GPM} = \frac{\text{CPA X MPH X W}}{5{,}940}$$

$$\textbf{GPM} = \frac{15 \text{x } 7 \text{x} 40}{5{,}940} = \frac{4{,}200}{5{,}940} = 0.71$$

The **nozzle** that you select must have a flow rate of 0.71 GPM when operated within the recommended pressure range of 8 to 25 psi. The table on page 14 shows the GPM at various pressures for several Spraying Systems and Delavan nozzles. For example, the Spraying Systems TK5 and Delavan D5 nozzles have a rated output of 0.71 GPM at 20 psi (Step 5). Either of these nozzles can be purchased for this application.

Example 2: You want to spray an insecticide on corn plants growing in 30-inch rows, using two nozzles per row. The desired application rate is 15 **GPA at** 6 MPH. Which disc-core hollow-cone nozzle should you select?

Because two nozzles spray each 30-inch row, W = $\frac{30}{2}$ = 15 inches. The required flow rate for each nozzle is as follows:

$$\text{GPM} = \frac{\text{GPA X MPH x W}}{5{,}940}$$

$$\text{GPM} = \frac{15 \text{ X } 6 \text{ X } 15}{5{,}940} = \frac{1{,}350}{5940} = 0.23$$

Either a Delavan DC3-25 or a Spraying Systems D3-25 disc-core nozzle (see table on page 14) has a rated output of 0.23 GPM at 60 psi. This output is within the recommended pressure range of 40 to 80 psi.

PRECALIBRATION CHECKING

After making sure that your sprayer is clean, install the selected nozzle tips, partially fill the tank with clean water, and operate the sprayer at a pressure within the recommended range. Place a container (for example, a quart jar) under each nozzle. Check to see whether all of the jars fill at about the same time. Replace any nozzle that an output of 5 percent more or less than the average of all the nozzles, an obviously different fan angle, or a nonuniform appearance in spray pattern.

To obtain uniform coverage, you must consider the spray angle, spacing, and height of the nozzle. The height must be readjusted for uniform coverage with various spray angles and nozzle spacings. ***Do not***

FLOODING FLAT-FAN NOZZLES

Manufacturer		Liquid pressure (psi)	Capacity (GPM)
Delavan	Spraying Systems		
DI	TKI	10	0.10
		20	0.14
		30	0.17
		40	0.20
D2	TK2	10	0.20
		20	0.28
		30	0.35
		40	0.40
D3	TK3	10	0.30
		20	0.42
		30	0.52
		40	0.60
D4	TK4	10	0.40
		20	0.57
		30	0.69
		40	0.80
D5	TK5	10	0.50
		20	0.71
		30	0.87
		40	1.00
D7.5	TK7.5	10	0.75
		20	1.10
		30	1.30
		40	1.50

use nozzles with different spray angles on the same boom for broadcast spraying.

Worn or partially plugged nozzles produce non-uniform patterns. Misalignment of nozzle tips is a common cause of uneven coverage. The boom must be level at all times to maintain uniform coverage. Skips and uneven coverage will result if one end of the boom is allowed to droop. A practicable method for determining the exact nozzle height that will produce the most uniform coverage is to spray on a warm surface such as a road and observe the drying rate. Adjust the height to eliminate excess streaking.

CALIBRATING YOUR SPRAYER

Now that you have selected and installed the proper nozzle tips (Steps 1 to 5, page 13) you are ready to complete the calibration of your sprayer (Steps 6 to 10 below), Check the calibration every few days during the season or when changing the pesticides being applied. New nozzles do not lessen the need to calibrate because some nozzles "wear in," and will increase their flow rate most rapidly during the first few hours of use. Once you have learned the following method, you can check application rates quickly and easily.

HOLLOW-CONE NOZZLES (DISC AND CORE TYPE)

Manufacturer		Liquid pressure (psi)	Capacity (GPM)
Delavan	Spraying Systems		
DC3-23	D3-23	40	0.12
		60	0.14
		80	0.16
		100	0.18
		150	0.21
DC2-25	D2-25	40	0.16
		60	0.19
		80	0.22
		100	0.25
		150	0.29
DC3-25	D3-25	40	0.19
		60	0.23
		80	0.26
		100	0.29
		150	0.35
DC3-45	D3-45	40	0.23
		60	0.28
		80	0.33
		100	0.36
		150	0.44
DC4-25	D4-25	40	0.29
		60	0.35
		80	0.40
		100	0.45
		150	0.54
DC5-25	D5-25	40	0.35
		60	0.42
		80	0.48
		100	0.54
		150	0.65

Step 6. Determine the required flow rate for each nozzle in ounces per minute (OPM). To convert the GPM (Step 4) to OPM use the following equation :

(Equation 3) OPM = GPM X 128

(1 gallon = 128 ounces)

From Example 1, page 13, the required nozzle flow rate = 0.71 GPM.

OPM = 0.71 x 128 =91

From Example 2, page 13, the required nozzle flow rate = 0.23 GPM.

OPM = 0.23 x 128 = 29

An alternative method for determining the OPM is to use the table on page 15. Locate the GPA selected in Step 1 in the lefthand column of the table. Follow this line across to the column indicating the ground speed that you determined in Step 2. The value shown at the intersection of these two columns is the number of ounces per minute (OPM) per inch of spray width.

To determine the output required per nozzle, multiply this value by the inches of sprayed width per nozzle.

From Example 1, page 13, GPA = 15 ; MPH = 7 ; W = 40 inches.

From the table, the value for OPM = 2.26. For a nozzle spacing of 40 inches, the required flow rate = 2.26 x 40 = 90.4 OPM.

Step 7. Collect the output from one of the nozzles in a container marked in ounces. Adjust the pressure until the ounces per minute (OPM) collected is the same as the amount that you determined in Step 6. Check several other nozzles to determine if their outputs fall within 5 percent of the desired OPM.

If it becomes impossible to obtain the desired output within the recommended range of operating pressures, select larger or smaller nozzle tips or a new ground speed, and then recalibrate. It is important for spray nozzles to be operated within the recommended pressure range. (The range of operating pressures is for pressure at the nozzle tip. Line losses, nozzle check valves, etc. may require the main pressure gage at the boom or at the controls to read much higher.)

Step 8. Determine the amount of pesticide needed for each tankful or for the acreage to be sprayed (see **Mixing Pesticides,** page 17). Add the pesticide to a partially filled tank of carrier (water, fertilizer, etc.) ; then add the carrier to the desired level with continuous agitation.

Step 9. Operate the sprayer in the field at the ground speed that you measured in Step 2 and at the pressure that you determined in Step 7. You will be spraying at the application rate that you selected in Step 1. After spraying a known number of acres, check the liquid level in the tank to verify that the application rate is correct.

Step 10. Check the nozzle flow rate frequently. Adjust the pressure to compensate for small changes in nozzle output resulting from nozzle wear or variations in other spraying components. Replace the nozzle tips and recalibrate when the output has changed 10 percent or more from that of a new nozzle, or when the pattern has become uneven.

MAINTENANCE AND CLEANING

Keep foreign materials out of the sprayer. These materials can clog the nozzles and damage the pump and other components. Thoroughly clean the spray equipment to prevent injury to crops susceptible to a previously applied pesticide. Some pesticides will cause the equipment to deteriorate if they remain in the sprayer for an extended period of time. The following practices will help you to maintain and clean your spray equipment properly.

1. Use only water that appears clean enough to drink. Small particles often found in the water from ditches, ponds, or lakes can clog nozzles and strainers. If you are in doubt, filter the water as you fill the tank.

2. Check and clean the strainers daily. Partially plugged strainers will create a pressure drop and reduce the nozzle flow rate. Most sprayers contain strainers at three locations. The first location is on the suction hose to protect the pump. The second is in the line between the pump and the boom. The third, which has the smallest openings, is in the nozzle body.

3. *Do not* use a metal object for cleaning nozzles. When a nozzle becomes clogged, always remove it and clean it. The nozzle orifice is precisely machined to close tolerances, and the use of a metal object for cleaning will destroy the orifice.

4. Flush a new sprayer before using. A new sprayer invariably contains metal chips and dirt from the manufacturing process. Remove the nozzles and strainers; then flush the sprayer and boom with clean water. Thoroughly clean each nozzle before reinstalling.

5. Clean your sprayer according to the formulation of pesticide used.

To remove residues of oil-based herbicides, such as esters of 2,4-D and similar materials, rinse the sprayer with kerosene, diesel fuel, or a comparable light oil. *Do not* use gasoline.

After rinsing the equipment with oil or a water-detergent, fill the tank 1/4 to 1/2 full with a water-ammonia solution (1 quart of household ammonia to 25 gallons of water) or a water-trisodium phosphate

Volume (GPA)	*Ground speed (MPH)*										
	3	4	5	6	7	8	9	10	12	15	20
	(OPM per 1 inch of spray width)										
5	0.32	0.43	0.54	0.65	0.75	0.86	0.97	1.08	1.29	1.62	2.15
10	0.65	0.86	1.08	1.29	1.51	1.72	1.94	2.15	2.59	3.23	4.31
15	0.97	1.29	1.62	1.94	2.26	2.59	2.91	3.23	3.88	4.85	6.46
20	1.29	1.72	2.15	2.59	3.02	3.45	3.87	4.31	5.17	6.46	8.62
30	1.94	2.59	3.23	3.88	4.52	5.17	5.82	4.46	7.76	9.70	12.93
40	2.59	3.45	4.31	5.17	6.04	6.90	7.74	8.62	10.34	12.92	17.24

(TSP) solution (1 cup TSP to 25 gallons of water).

Circulate the solution through the system for a few minutes, letting a small amount go through the nozzles. Allow the remainder of the solution to stand at least 6 hours; then pump it through the nozzles. Remove the nozzles and strainers and flush the system twice with clean water.

Equipment in which wettable powders, amine forms, or water-soluble liquids has been used should be thoroughly rinsed with a water-detergent solution (2 pounds of detergent in 30 to 40 gallons of water). Water-soluble materials should be treated as water-soluble liquids. Allow the water-detergent solution to circulate through the system for several minutes. Remove the nozzles and strainers and flush the system twice with clean water.

6. When it is time to store your sprayer, add 1 to 5 gallons of lightweight oil, depending upon the size of your tank, before the final flushing. As water is pumped from the sprayer, the oil will leave a protective coating inside the tank, pump, and plumbing. To prevent corrosion, remove the nozzle tips and strainers, dry them, and store in a can of light oil, such as diesel fuel or kerosene.

7. Corrosive fertilizer solutions should not be used in certain sprayers. Liquid fertilizers are corrosive to copper, galvanized surfaces, brass, bronze, and steel. You can damage an ordinary sprayer irreparably by one use of a liquid fertilizer. Sprayers made completely of stainless steel or aluminum are available for applying liquid fertilizers. Aluminum satisfactory for some nitrogen fertilizers but not for mixed fertilizers.